US009224575B2

(12) **United States Patent**
Yamamoto et al.

(10) **Patent No.: US 9,224,575 B2**
(45) **Date of Patent: Dec. 29, 2015**

(54) CHARGED PARTICLE BEAM DEVICE AND OVERLAY MISALIGNMENT MEASUREMENT METHOD

(71) Applicant: **Hitachi High-Technologies Corporation**, Minato-ku, Tokyo (JP)

(72) Inventors: **Takuma Yamamoto**, Tokyo (JP); **Tomohiro Funakoshi**, Tokyo (JP); **Kenji Tanimoto**, Tokyo (JP)

(73) Assignee: **Hitachi High-Technologies Corporation**, Tokyo (JP)

(*) Notice: Subject to any disclaimer, the term of this patent is extended or adjusted under 35 U.S.C. 154(b) by 0 days.

(21) Appl. No.: **14/435,203**

(22) PCT Filed: **Oct. 23, 2013**

(86) PCT No.: **PCT/JP2013/078678**
§ 371 (c)(1),
(2) Date: **Apr. 13, 2015**

(87) PCT Pub. No.: **WO2014/065311**
PCT Pub. Date: **May 1, 2014**

(65) **Prior Publication Data**
US 2015/0287569 A1 Oct. 8, 2015

(30) **Foreign Application Priority Data**
Oct. 26, 2012 (JP) 2012-236901

(51) **Int. Cl.**
H01J 37/22 (2006.01)
G01B 15/00 (2006.01)
H01J 37/28 (2006.01)

(52) **U.S. Cl.**
CPC ***H01J 37/222*** (2013.01); ***G01B 15/00*** (2013.01); ***H01J 37/28*** (2013.01); *H01J 2237/2817* (2013.01)

(58) **Field of Classification Search**
USPC 250/306, 307, 310
See application file for complete search history.

(56) **References Cited**

U.S. PATENT DOCUMENTS

5,608,218 A 3/1997 Sato et al.
2004/0066517 A1 * 4/2004 Huang et al. 356/509
(Continued)

FOREIGN PATENT DOCUMENTS

JP 6-243814 A 9/1994
JP 3291880 B2 6/2002
(Continued)

OTHER PUBLICATIONS

International Search Report (PCT/ISA/210) dated Nov. 19, 2013, with English translation (two (2) pages).

Primary Examiner — Kiet T Nguyen
(74) *Attorney, Agent, or Firm* — Crowell & Moring LLP

(57) ABSTRACT

An overlay misalignment amount of patterns on different layers can be accurately measured. To achieve this, a charged particle beam device includes: a charged particle beam source irradiating a sample with a charged particle beam under one irradiation condition; a first detector that detects a signal generated front a first pattern formed on a first layer in an irradiation region; a second detector that detects a signal generated from a second pattern formed on a second layer in the irradiation region at a same time as the first detector; and an image processing unit that calculates an overlay misalignment amount between the first pattern and the second pattern based on a first detection signal and a second detection signal output by the first detector and the second detector, respectively.

16 Claims, 11 Drawing Sheets

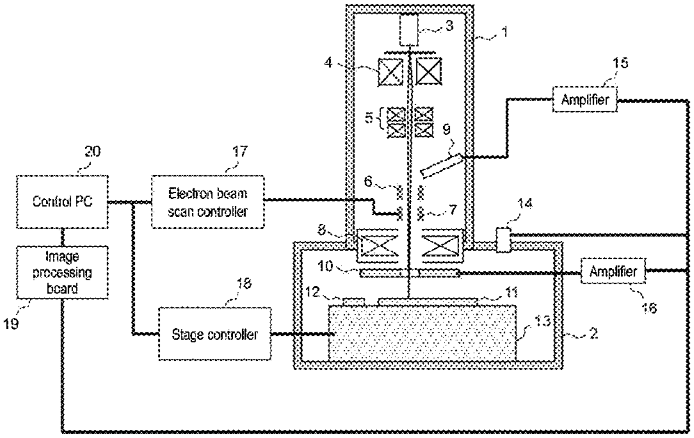

(56) References Cited

U.S. PATENT DOCUMENTS

2008/0224035	A1	9/2008	Sutani et al.	
2011/0139982	A1	6/2011	Kijima et al.	
2011/0268363	A1*	11/2011	Osaki et al.	382/209
2012/0274757	A1	11/2012	Bai et al.	
2012/0305767	A1	12/2012	Toyoda et al.	
2015/0136976	A1*	5/2015	Matsuoka	250/306

FOREIGN PATENT DOCUMENTS

JP	2006-286685	A	10/2006
JP	2007-42929	A	2/2007
JP	2008-58166	A	3/2008
JP	2010-85138	A	4/2010
JP	2011-119446	A	6/2011
WO	WO 2011/099490	A1	8/2011

* cited by examiner

Fig. 1

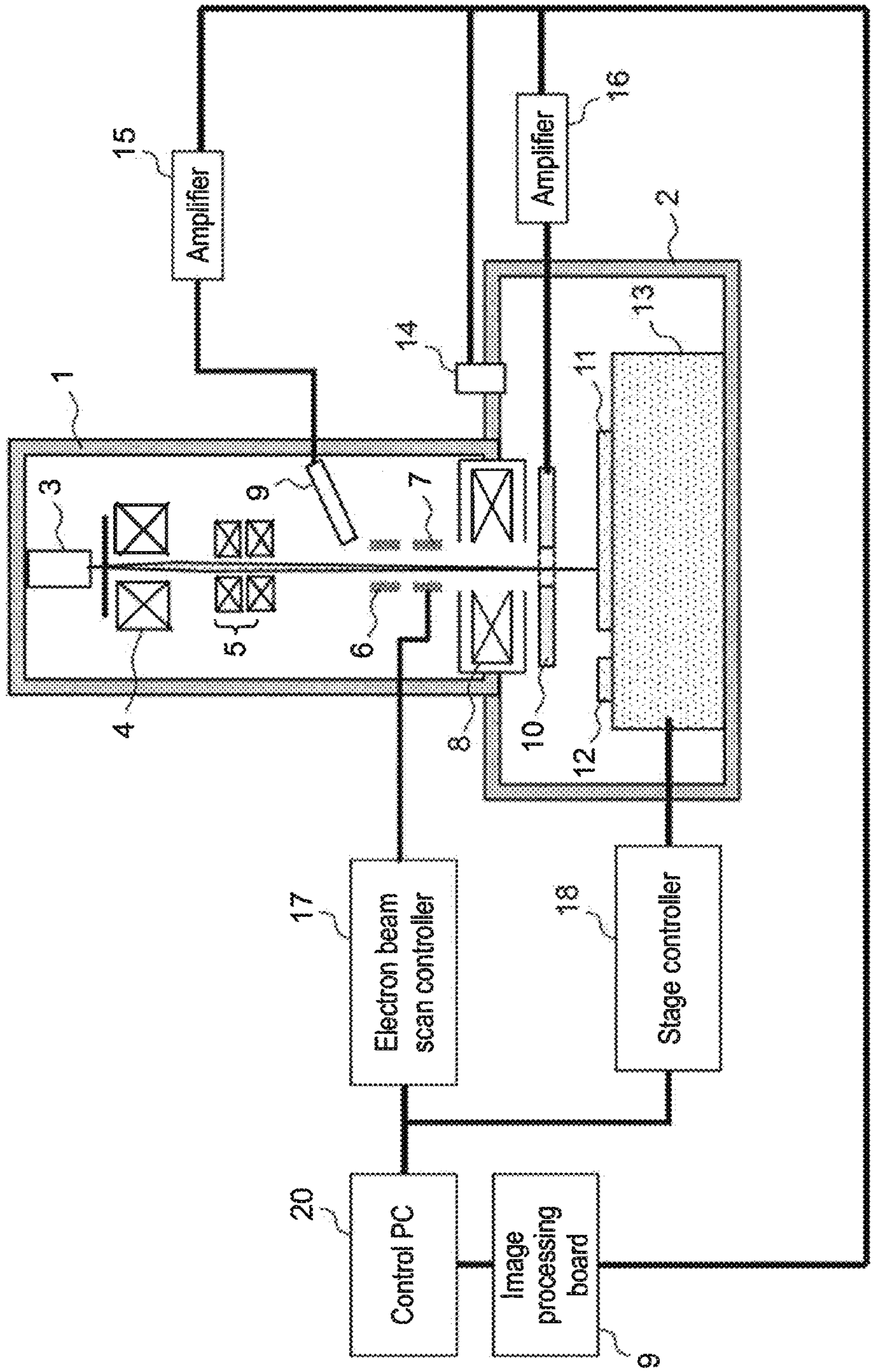
Amplifier
Amplifier
Electron beam scan controller
Stage controller
Image processing board
Control PC

Fig. 2

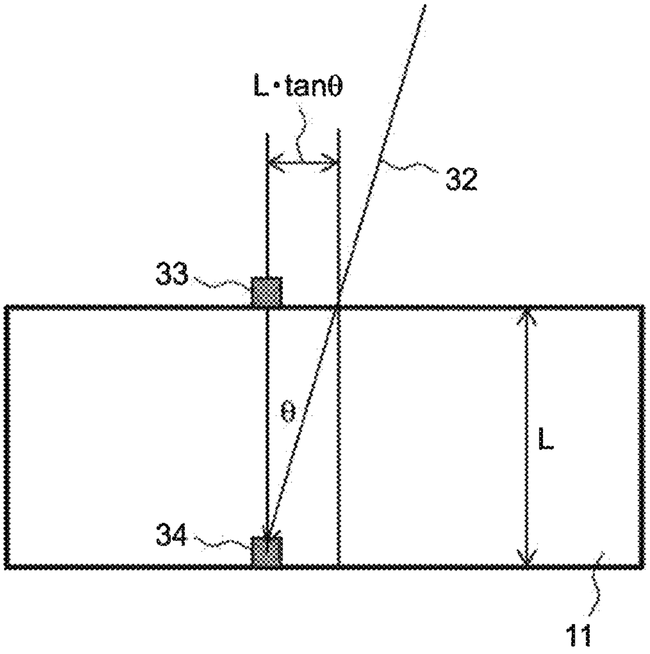
L·tanθ
32
33
θ
L
34
11

Fig. 3

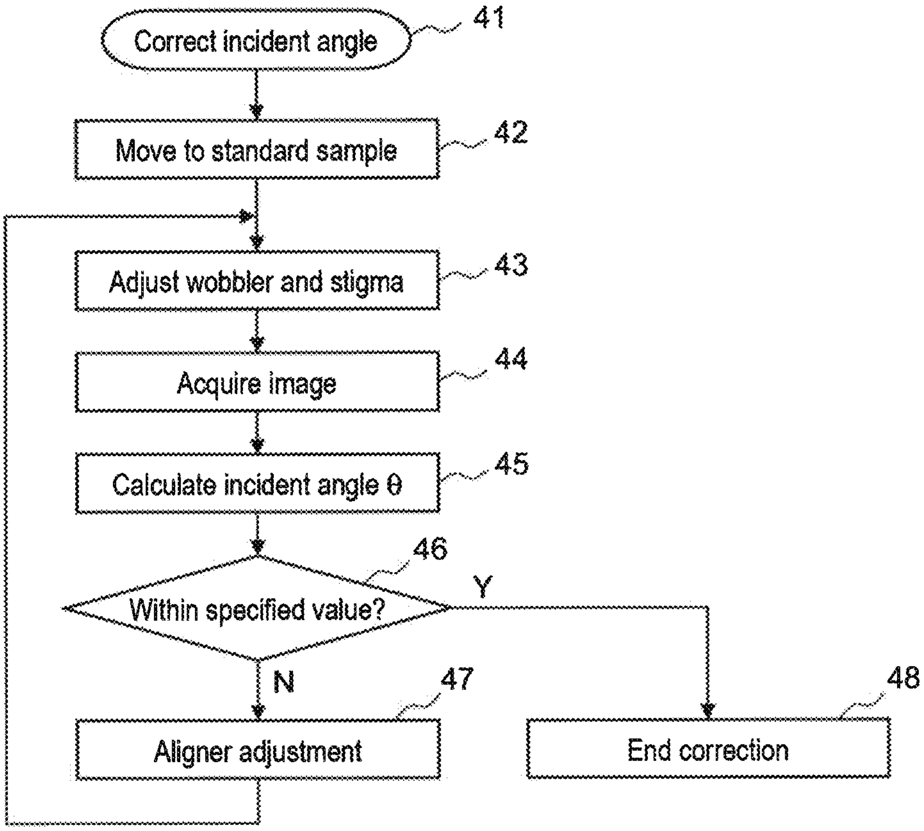
Correct incident angle
41
Move to standard sample
42
Adjust wobbler and stigma
43
Acquire image
44
Calculate incident angle θ
45
Within specified value?
46
Y
N
Aligner adjustment
47
End correction
48

Fig. 4A

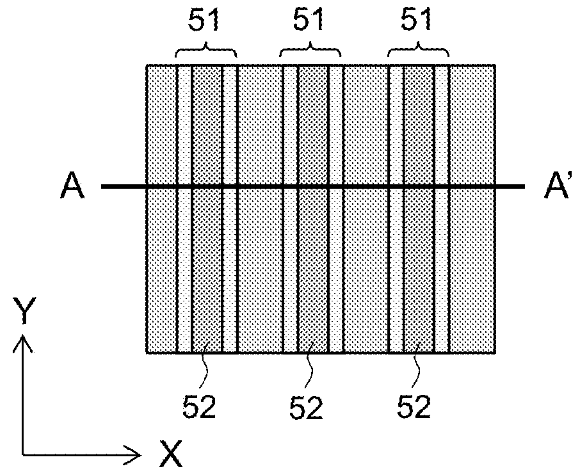
51
51
51
A
A'
Y
X
52
52
52

Fig. 4B

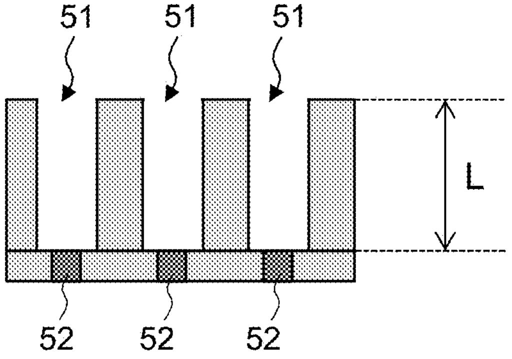
51
51
51
L
52
52
52

Fig. 5A

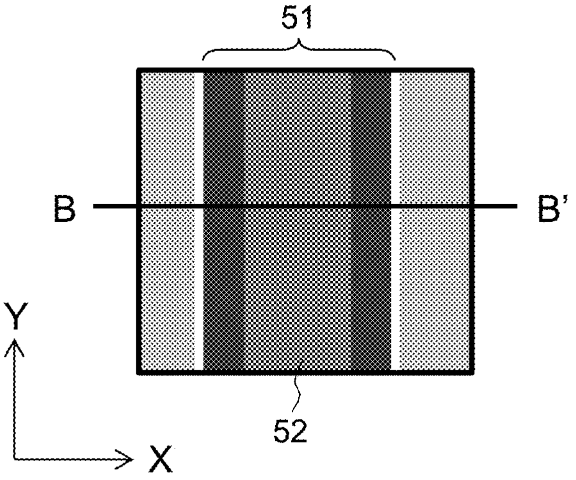

Fig. 5B

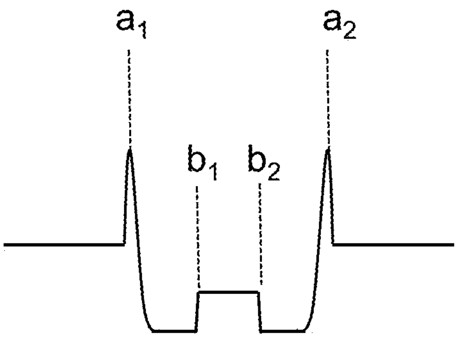

Fig. 6

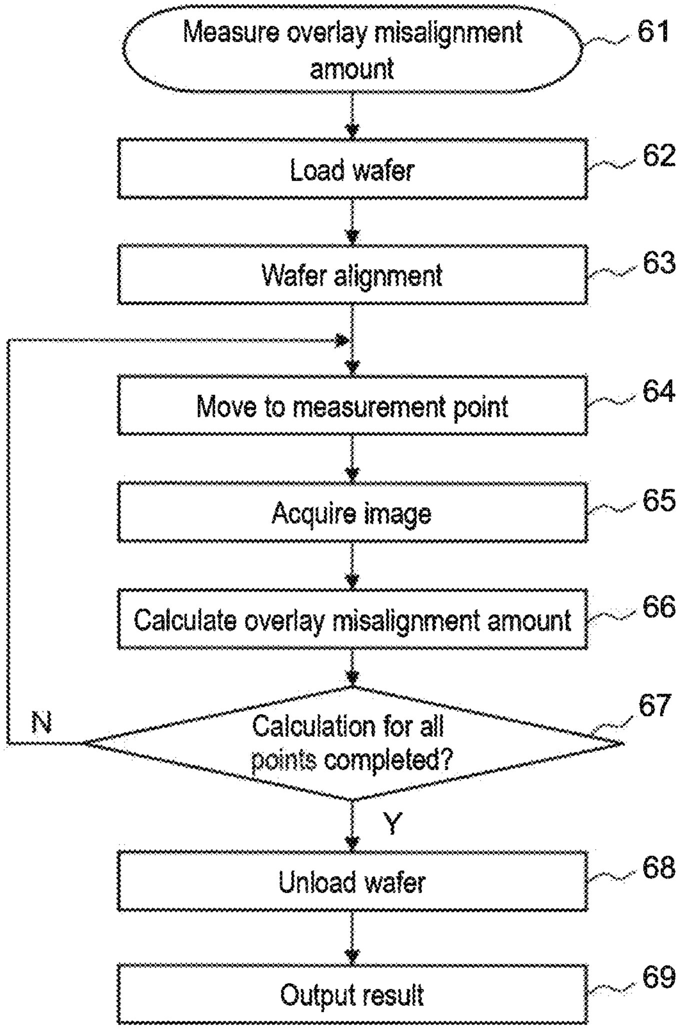
Measure overlay misalignment amount
61
Load wafer
62
Wafer alignment
63
Move to measurement point
64
Acquire image
65
Calculate overlay misalignment amount
66
Calculation for all points completed?
67
N
Y
Unload wafer
68
Output result
69

Fig. 7A

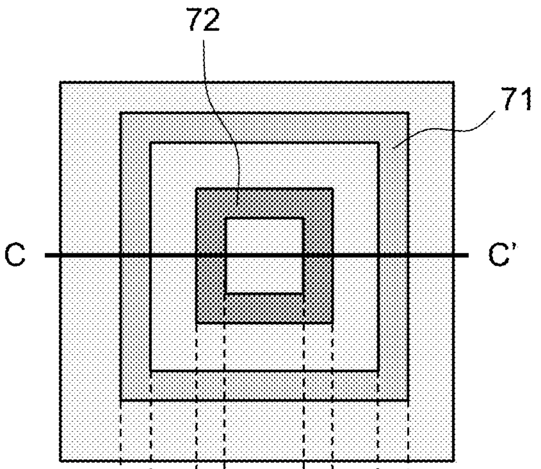

Fig. 7B

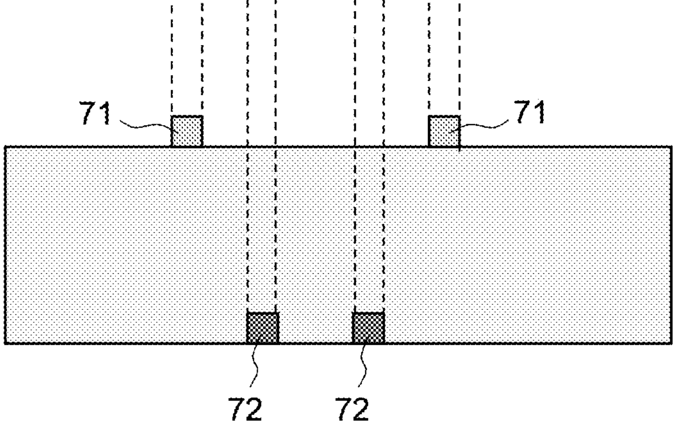

Fig. 8A

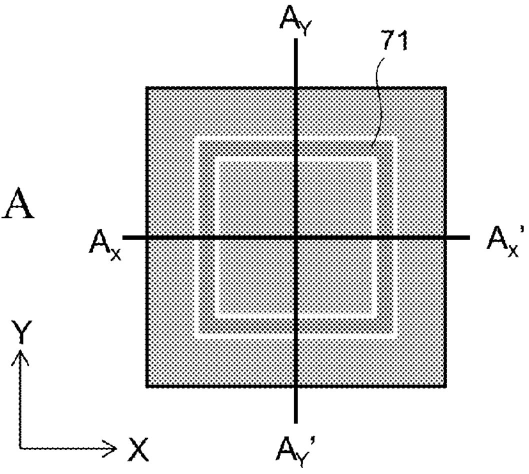
A_Y
71
A_x
A_x'
Y
X
A_Y'

Fig. 8B

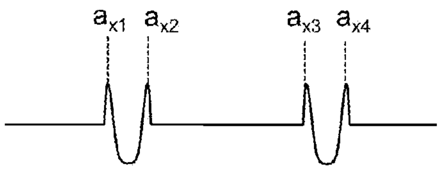

Fig. 8C

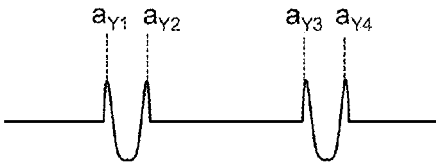

Fig. 8D

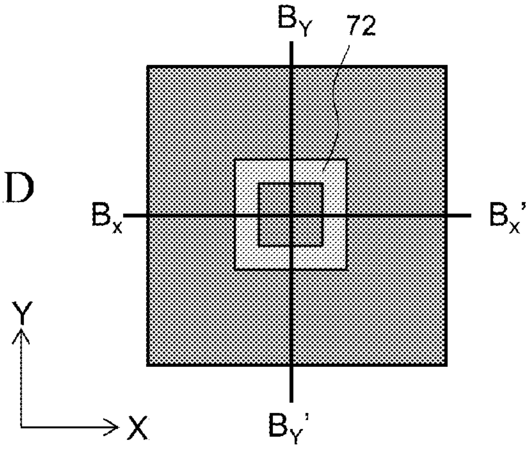
B_Y
72
B_x
B_x'
Y
X
B_Y'

Fig. 8E

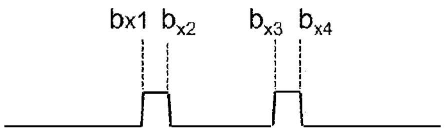

Fig. 8F

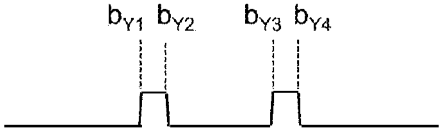

Fig. 9

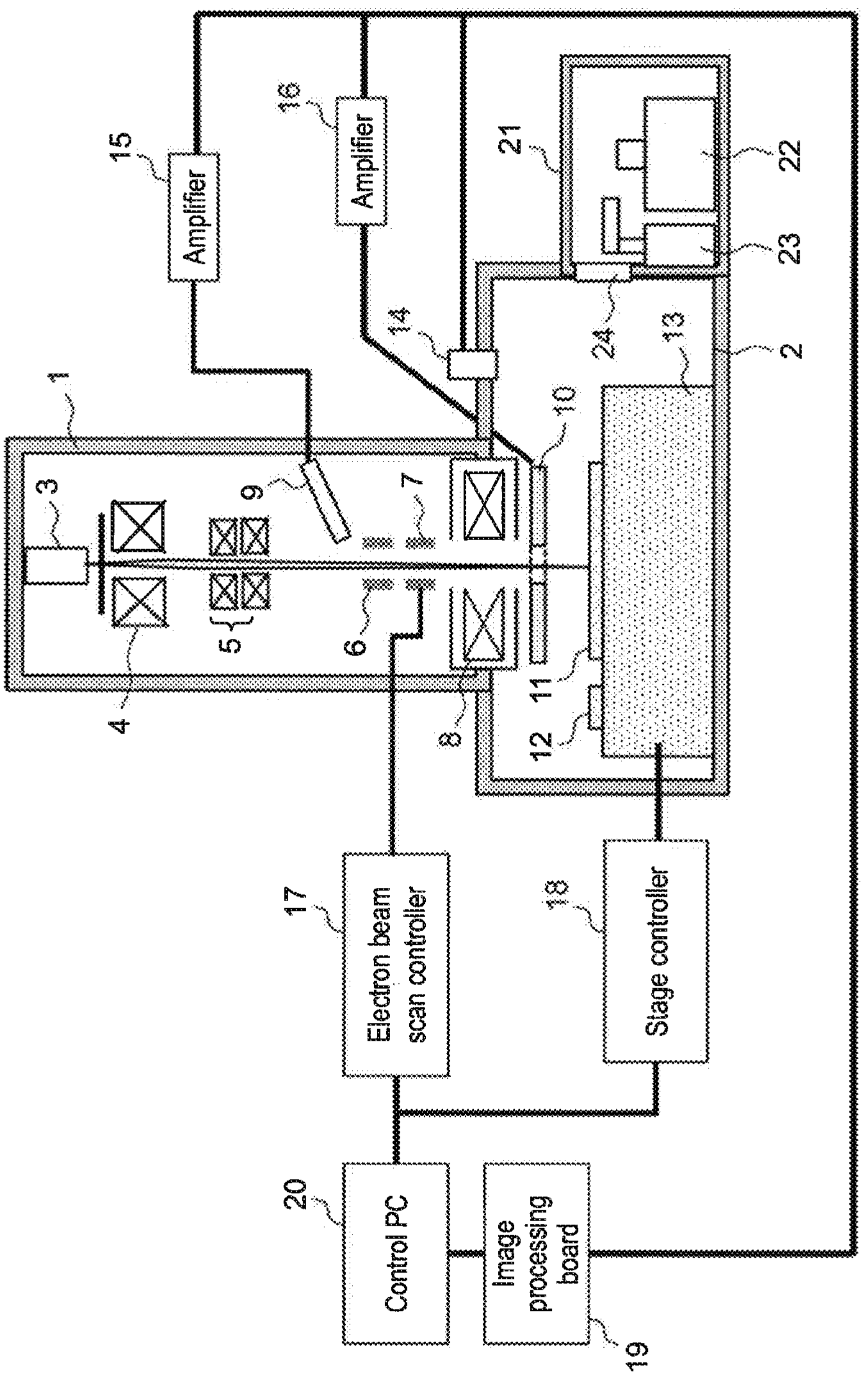
Amplifier
Amplifier
Electron beam scan controller
Stage controller
Image processing board
Control PC

Fig. 10

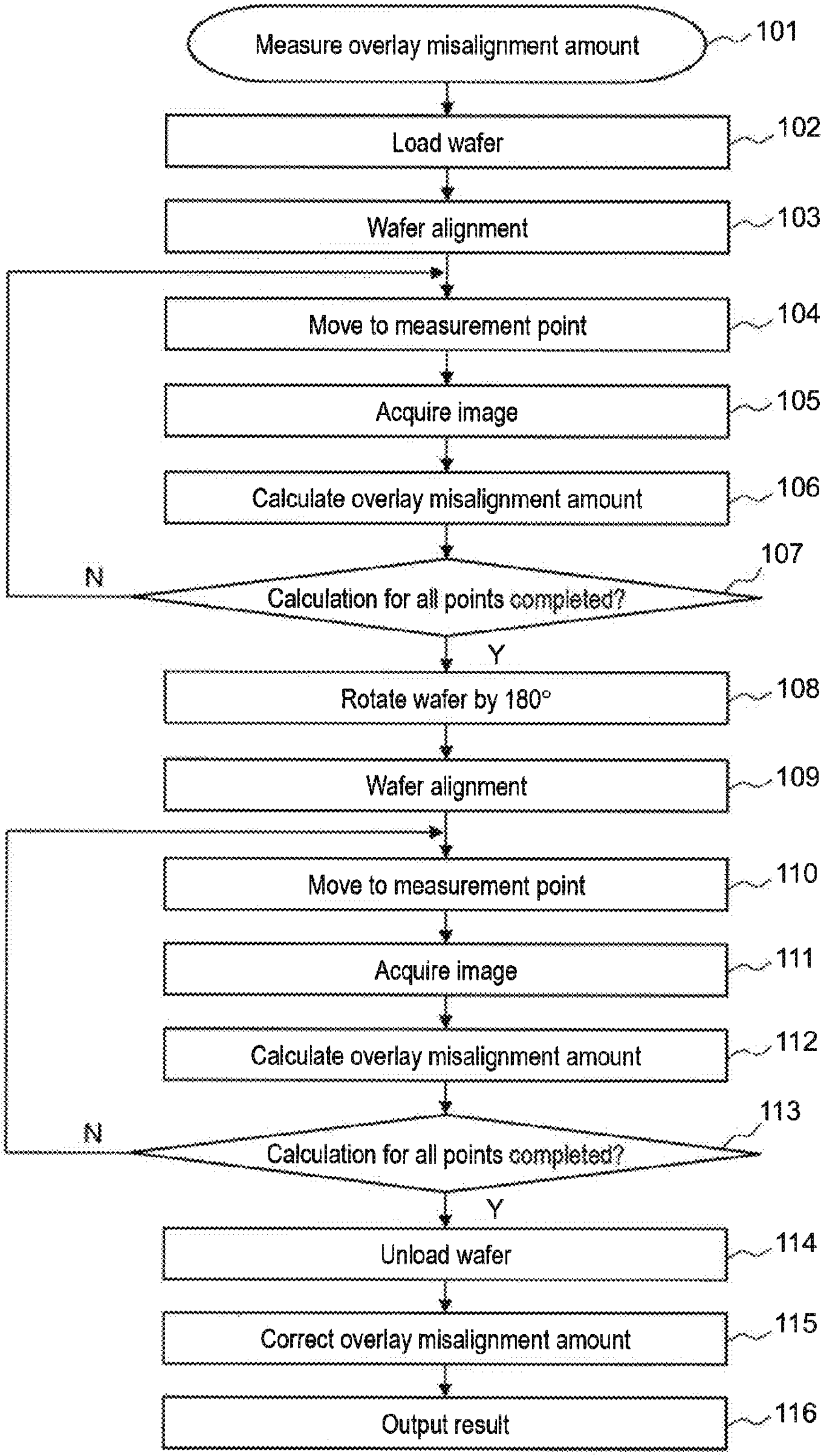
Measure overlay misalignment amount
101
Load wafer
102
Wafer alignment
103
Move to measurement point
104
Acquire image
105
Calculate overlay misalignment amount
106
107
N
Calculation for all points completed?
Y
Rotate wafer by 180°
108
Wafer alignment
109
Move to measurement point
110
Acquire image
111
Calculate overlay misalignment amount
112
113
N
Calculation for all points completed?
Y
Unload wafer
114
Correct overlay misalignment amount
115
Output result
116

Fig. 11A

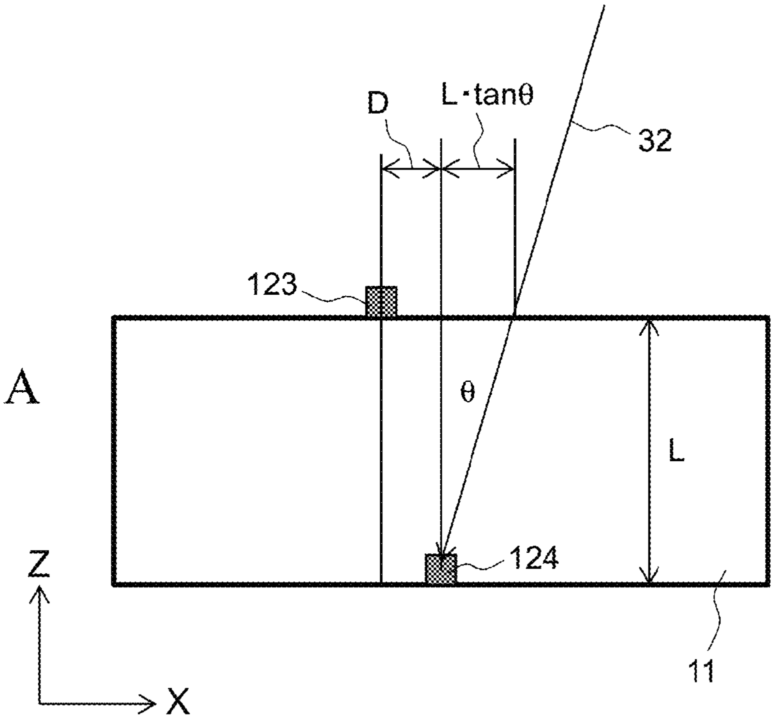
D
L·tanθ
32
123
θ
L
124
11
Z
X

Fig. 11B

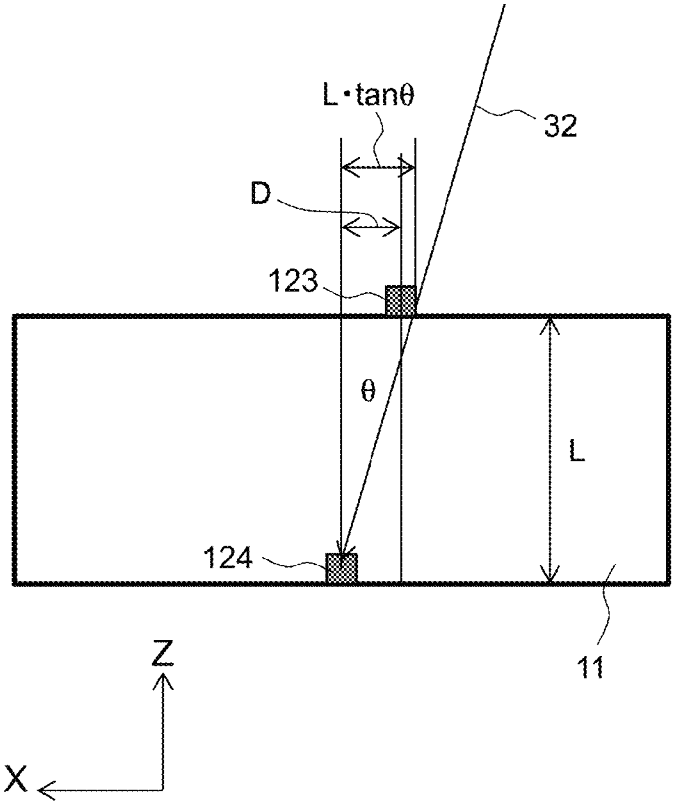
L·tanθ
32
D
123
θ
L
124
11
Z
X

CHARGED PARTICLE BEAM DEVICE AND OVERLAY MISALIGNMENT MEASUREMENT METHOD

TECHNICAL FIELD

The present invention relates to a technique to measure an overlay misalignment amount of patterns, e.g., in steps for manufacturing a semiconductor device.

BACKGROUND ART

Descriptions will be given of problems of an examination technique for a case of manufacturing a semiconductor device on a semiconductor wafer. A semiconductor device is manufactured by repeating a step to transfer a pattern formed on a photo mask onto a semiconductor wafer by a lithographic processing and an etching processing. In the process for manufacturing a semiconductor device, the quality of, e.g., a lithographic processing and an etching processing and the occurrence of a foreign substance have a significant influence on a yield of the semiconductor device. Thus, early or previous detection of an abnormality or a defect in the manufacture processing is important. Accordingly, in the manufacture process, a pattern formed on a semiconductor wafer is measured and examined.

Particularly, due to recent development of miniaturizing and three-dimensionally forming a semiconductor device, managing overlaying patterns in different processes becomes more important. Conventionally, in order to determine an overlay misalignment amount of patterns between different process steps, a semiconductor device is irradiated with a light and a position of a pattern manufactured in each step is measured based on a reflected light from the semiconductor device.

However, due to miniaturizing of a pattern, a light hardly obtains a required accuracy. Needs for measurement of an overlay misalignment amount with use of a scanning electron microscope, which has a higher resolution than a light, are increasing. For example, Patent Literature 1 proposes a method for measuring a misalignment amount between two patterns formed by double patterning with a scanning electron microscope. In Patent Literature 1, two patterns formed on a surface of a semiconductor device are measured. Thus, a scanning electron microscope can easily acquire images of those patterns.

On the other hand, to measure an overlay misalignment amount between a pattern formed on a surface of a semiconductor device and a pattern formed inside the semiconductor device, respective favorable images of the surface pattern and the inside pattern are required to be obtained. Generally, while a secondary electron from a sample includes much information of the surface, information of the inside structure is mainly reflected in a back scattered electron. Patent Literature 2, for example, describes a scanning electron microscope capable of detecting a secondary electron and a back scattered electron, separately. Patent Literature 3 discloses a technique to improve a contrast of a lower layer pattern with use of detection signals from multiple detectors. Patent Literature 4 discloses a technique for acquiring pattern images of different layers with two light sources having different irradiation energies and displaying the pattern images alternatively or substantially in an overlaid manner.

CITATION LIST

Patent Literature

Patent Literature 1
JP Patent Publication (Kokai) No. 2010-85138
Patent Literature 2
JP Patent No. 3291880
Patent Literature 3
JP Patent Publication (Kokai) No. 2011-119446
Patent Literature 4
JP Patent Publication (Kokai) No. 6-243814 (1994)
Patent Literature 5
JP Patent Publication (Kokai) No. 2007-42929

SUMMARY OF INVENTION

Technical Problem

However, measurement of an overlay misalignment amount of a surface pattern (upper layer pattern) and an inside pattern (lower layer pattern) by the conventional technique has the following problems.

As described above, much information of a surface pattern is included in a secondary electron, while much information of an internal pattern is included in a back scattered electron. However, appearance of a pattern contrast or pattern edge of a secondary electron is significantly different from that of a back scattered electron. Thus, calculation of pattern positions by same algorithm is impossible.

If an incident direction of an electron beam inclines with respect to a sample surface (if the electron beam is not perpendicularly incident on the sample surface), the inclination may cause a measurement error between a pattern position of a surface and a pattern position of an inside.

A method for acquiring a surface pattern and an inside pattern with two electron guns (Patent Literature 4) requires previous coincidence of two electron beam axes. The method has an object of allowing observation of the surface pattern and the inside pattern on a screen. In the method, calculation of a value of an overlay misalignment amount is not considered.

The present invention has been made by considering the aforementioned technical problems. The present invention provides a technique to measure accurately a value of an overlay misalignment amount between patterns formed on different layers.

Solution to Problem

The present invention includes: a charged particle beam source that irradiates a sample with a charged particle beam under one irradiation condition; a first detector that detects a signal generated from a first pattern formed on a first layer in an irradiation region; a second detector that detects a signal generated from a second pattern formed on a second layer in the irradiation region at a same time as the first detector; and an image processing unit that calculates an overlay misalignment amount between the first pattern and the second pattern based on a first detection signal and a second detection signal output by the first detector and the second detector, respectively.

Advantageous Effects of Invention

The present invention allows accurate measurement of an overlay misalignment amount of patterns formed on different layers. Feedback of the measurement result to a manufacturing process contributes to improvement in yield of a semiconductor device. Problems, configurations and effects other than those described above are clear from the following descriptions of embodiments.

BRIEF DESCRIPTION OF DRAWINGS

FIG. **1** is a diagram illustrating a schematic configuration of a scanning electron microscope of Embodiment 1.

FIG. **2** is a diagram explaining a cause of measurement misalignment between patterns overlaid on different layers.

FIG. **3** is a diagram illustrating a procedure for correcting an incident angle of an irradiation electron.

FIGS. **4**A and **4**B are diagrams of a structure example of a standard sample.

FIGS. **5**A and **5**B are diagrams explaining a method of correcting an incident angle with a standard sample.

FIG. **6** is a diagram of a procedure for measuring an overlay misalignment amount of Embodiment 1.

FIGS. **7**A and **7**B are diagrams of an example of a target pattern for measurement of an overlay misalignment amount.

FIGS. **8**A-**8**F are diagrams explaining a method for measuring an overlay misalignment amount.

FIG. **9** is a diagram of a schematic configuration example of a scanning electron microscope of Embodiment 2.

FIG. **10** is a diagram of a procedure for measuring an overlay misalignment amount in Embodiment 2.

FIGS. **11**A and **11**B are diagrams explaining a cancelation principle of an overlay misalignment amount in Embodiment 2.

DESCRIPTION OF EMBODIMENTS

Hereunder, descriptions will be given of embodiments of the present invention in accordance with the drawings. The embodiments of the present invention are not limited to the following examples, and various modifications can be made within the scope of the technical idea of the embodiments.

Embodiment 1

Configuration of Device

FIG. **1** illustrates a configuration of a device of a scanning electron microscope of the present embodiment. A device body of the scanning electron microscope is formed of a column **1** and a sample chamber **2**.

The column **1** includes therein an electron gun **3** that generates irradiation electrons, a condenser lens **4** and an objective lens **8** that converge the irradiation electrons to irradiate a wafer **11**, a deflector **7** that scans the irradiation electrons over the wafer **11**, an aligner **5** that aligns the irradiation electrons with respect to the objective lens **8**, a secondary electron detector **9** that detects secondary electrons generated from the wafer **11**, an ExB filter **6** that is used for capture of the secondary electrons into the secondary electron detector **9**, and a back scattered electron detector **10** that detects back scattered electrons from the wafer **11**. The deflector **7** scans irradiation electrons over the wafer **11** in accordance with a signal provided by an electron beam scan controller **17**.

An XY stage **13** set in the sample chamber **2** moves the wafer **11** with respect to the column **1** in accordance with a signal provided by a stage controller **18**. On the XY stage **13**, a standard sample **12** to be used for correction of an incident angle of an irradiation electron is placed. The device further includes an optical microscope **14** for wafer alignment.

Detection signals output by the secondary electron detector **9** and the back scattered electron detector **10** are subject to signal conversion by amplifiers **15** and **16**, and are provided to an image processing board **19**. The image processing board **19** adds signals provided by the secondary electron detector **9** and the back scattered electron detector **10** to convert the signals to an image. A detection signal from the secondary electron detector **9** indicates mainly pattern information of a wafer surface (upper layer). A detection signal from the back scattered electron detector **10** indicates mainly pattern information of a lower layer. The image processing board **19** calculates a numerical value of overlay difference of patterns from the pattern image generated based on the two detection signals. A control PC **20** controls entire operation of the scanning electron microscope. The control PC **20** is connected to a monitor or an input device (not illustrated). A GUI, which will be described later, is displayed on the non-illustrated monitor.

[Principle of Occurrence of Measurement Difference]

FIG. **2** provides an explanation of a cause of difference included in an overlay measurement value of patterns formed on different layers, in a case where an irradiation electron **32** is incident on a sample surface obliquely from above (where the irradiation electron **32** is deviated from a perpendicular of the sample surface by angle θ).

In FIG. **2**, a pattern **33** and a pattern **34** are formed at a same position of two layers a height difference between which is a thickness L of the sample **11**. In this case, a misalignment amount between the pattern **33** and the pattern **34** should be measured as zero. However, inclination of the irradiation electron **32** by the angle θ provides a measurement result in which respective positions of the patterns **33** and **34** are deviated from each other by L·tan θ. Thus, before measurement of an overlay misalignment amount of patterns formed on different layers, correction is required to cause the irradiation electron **32** to be incident perpendicularly on the wafer **11**.

[Adjustment of Irradiation Angle]

FIG. **3** illustrates a procedure for correcting an inclination of an irradiation electron. **32** (irradiation angle θ). When correcting operation of the irradiation angle of the irradiation electron **32** is selected on the GUI screen on the monitor, operation illustrated in FIG. **3** starts (process **41**). After start of the correcting operation, the control PC **20** controls movement of the XY stage **13** and moves the standard sample **12** to an irradiation region of the irradiation electron **32** (process **42**). On the standard sample **12**, patterns are formed at a same position on two layers without misalignment, or two patterns on different layers having a known pattern position relationship.

At this stage, a wobbler and a stigma are adjusted (process **43**). Subsequently, the control PC **20** acquires an image of the standard sample **12** (process **44**). More specifically, the control PC **20** acquires a secondary electron image corresponding to a top layer pattern of the standard sample **12** and a back scattered electron image corresponding to a second layer pattern from the top.

Next, the image processing board **19** calculates the incident angle (inclination) **0** of the irradiation electron **32** (process **45**). More specifically, the image processing board **19** calculates a pattern position on the upper layer and a pattern position on the lower layer based on a detected image, calculates the difference L·tan θ between the two pattern positions, and calculates the incident angle θ with the difference and the known thickness L.

Next, the image processing board **19** compares the calculated incident angle θ with a specified value (allowable value) (process **46**).

If the incident angle θ is larger than the specified value, the control PC **20** adjusts the inclination of the irradiation electron **32** with the aligner **5** (process **47**). The control PC **20** subsequently returns the process to process **43**. In this way, with respect to adjusted incident angle θ, adjustment of the wobbler and a stigma, acquisition of the image and calculation processing of the incident angle (inclination) θ are executed. The aligner **5** is formed of two sets of alignment coils that are disposed above and below the column **1**. The aligner **5** can change only the inclination of an electron beam while fixing the irradiation position of the irradiation electron **32** on the sample.

If the calculated incident angle θ is within the specified value, the control PC **20** ends the correction processing of the incident angle θ (process **48**).

[Method of Calculating Incident Angle θ]

A processing procedure for calculating the incident angle θ of the irradiation electron **32** will be described with reference to FIG. **4** and FIG. **5**. FIG. **4** is a schematic diagram to explain a pattern shape formed on the standard sample **12**. FIG. **4**(*a*) is a diagram (plane view) of the standard sample **12** viewed from an incident direction of the irradiation electron **32**. FIG. **4**(*b*) is a schematic diagram (cross-sectional view) of a section taken along line A-A' in FIG. **4**(*a*). As illustrated in FIG. **4**(*b*), a groove **51** with a depth L is formed on the surface of the standard sample **12**. A bottom surface of the groove **51** has a line pattern **52** formed thereon. The center of the groove **51** aligns with the center of the line pattern **52**. No misalignment between the centers is confirmed through observation of the section of the same lot.

FIG. **5** illustrates an SEM image of the standard sample **12**. The SEM image in FIG. **5**(*a*) is obtained by adding a signal from the secondary electron detector **9** and a signal from the back scattered electron detector **10**. FIG. **5**(*b*) illustrates a signal strength in the section B-B'. In FIG. **5**(*b*), a**1** and a**2** are peaks of a signal Obtained for the edge of the groove **51**. The section b**1**-b**2** corresponds to the line pattern **52** on the lower layer. The signal strength in the section b**1**-b**2** is higher than that of the surroundings.

Descriptions of the procedure for calculating the incident angle θ based on respective positions of a**1**, a**2**, b**1**, b**2**, which are obtained from the SEM image, are as follows. As described above, if the incident angle θ is zero (no inclination), the center position of the groove **51** (a**1**+a**2**)/2 should align with the center position of the line pattern **52** (b**1**+b**2**)/2. However, if the incident angle θ is not zero (with the incident angle of θ_x), the center positions are deviated from each other by L·tan θ, as described with reference to FIG. **2**.

Thus, the following relation holds.

$$(b1+b2)/2-(a1+a2)/2=L\cdot\tan\theta_x \qquad \text{Equation 1}$$

When the above equation is solved for θ, the following equation is obtained.

$$\theta_x=\mathrm{ATAN}\,[\{(b1+b2)/2-(a1+a2)/2\}/L] \qquad \text{Equation 2}$$

While an inclination angle in an X direction is obtained as θ_x herein, an inclination angle in a Y direction is measured similarly for the pattern on which the groove **51** is formed in the X direction.

[Method for Measuring Overlay Misalignment Amount]

Descriptions will be given of a method for measuring an overlay misalignment amount in the present embodiment with reference to FIG. **6** to FIG. **8**. The measurement processing is executed of course after the aforementioned correction of the inclination angle. FIG. **6** illustrates a processing procedure executed in calculation of the overlay misalignment amount.

The control PC **20** receives selection of the wafer **11** and a recipe and selection to execute overlay measurement, through the GUI screen (process **61**). The control PC **20** loads the selected wafer **11** to the sample chamber **2** (process **62**).

Next, the control PC **20** executes alignment by an optical microscope image and an SEM image (process **63**). Subsequently, the control PC **20** controls the XY stage **13** and moves the wafer **11** to an overlay measurement point that is registered in the recipe (process **64**).

Subsequently, the image processing board **19** acquires an SEM image in accordance with a predetermined condition that is registered in the recipe (process **65**). The image processing board **19** detects a pattern position on the upper layer in the secondary electron image by a signal from the secondary electron detector **9** and a pattern position on the lower layer in the back scattered electron image by a signal from the back scattered electron detector **10**, and calculates an overlay misalignment amount from the difference between the pattern positions on the upper layer and the lower layer (process **66**). In the calculation, a misalignment amount unique to the incident angle θ of the irradiation electron **32** is subtracted from an apparent overlay misalignment amount between the pattern on the upper layer and the pattern on the lower layer. Descriptions of the calculation method will be given later in detail.

The control PC **20** determines whether calculations of the overlay misalignment amount for all measurement points specified by the recipe are completed (process **67**). While an unmeasured measurement point remains (while a negative result is obtained), the control PC **20** moves a next measurement point to the irradiation range of the irradiation electron **32** and executes image acquisition and overlay misalignment amount calculation. When the measurement of all the measurement points is completed (when a positive result is obtained), the control PC **20** unloads the wafer **11** (process **68**), and outputs the measurement result of the overlay misalignment amount (process **69**).

FIG. **7** illustrates a structure example of patterns for measurement of an overlay misalignment amount. FIG. **7**(*a*) is a diagram viewed from the incident direction of the irradiation electron **32**. FIG. **7**(*b*) illustrates a section taken along C-C'. A pattern **71** is formed on a wafer surface. A pattern **72** is formed inside the wafer. The center of the pattern **71** is designed to align with the center of the pattern **72**.

FIG. **8** provides an explanation of a specific example of calculation processing in process **66**. FIG. **8**(*a*) is an image obtained by a detection signal output from the secondary electron detector **9**, which has a peak of the detection signal at an edge portion of the pattern **71** formed on the wafer surface. In FIG. **8**(*b*), which illustrates a signal strength in the section Ax-Ax', four peaks, a_{X1}, a_{X2}, a_{X3}, a_{X4} corresponding to a pattern edge are seen. If the center position of the pattern **71** in the X direction is a_{Xc}, the center position a_{Xc} is given by the following equation.

$$a_{Xc}=(a_{X1}+a_{X2}+a_{X3}+a_{X4})/4 \qquad \text{Equation 3}$$

In the same way, if the center position of the pattern **71** in the Y direction is a_{Yc}, the e center position a_{Yc} is given by the following equation with use of the four peaks of the signal strength in the section A_Y-A_Y' in FIG. **8**(*c*).

$$a_{Yc}=(a_{Y1}+a_{Y2}+a_{Y3}+a_{Y4})/4 \qquad \text{Equation 4}$$

FIG. **8**(*d*) is an image obtained by a detection signal output from the back scattered electron detector **10**, in which a signal strength is high at the position of the pattern **72** formed inside the wafer, due to contrast caused by variation of materials. FIG. **8**(*e*) illustrates a signal strength in the section B_X-B_X', in which b_{X1}, b_{X2}, b_{X3}, b_{X4} indicate a part at which the signal strength changes. In this case, the center position b_{Xc} of the pattern **72** in the X direction is given by the following equation.

$$b_{Xc}=(b_{X1}+b_{X2}+b_{X3}+b_{X4})/4 \qquad \text{Equation 5}$$

In the same way, if a center position of the pattern **72** in the Y direction is b_{Yc} the center position b_{Yc} is given by the following equation with four strength change positions in a signal strength of the section B_Y-B_Y' in FIG. **8**(*f*).

$$b_{Yc}=(b_{Y1}+b_{Y2}+b_{Y3}+b_{Y4})/4 \qquad \text{Equation 6}$$

If overlay misalignment amounts in the X direction and in the Y direction are Δx and Δy, respectively, Δx and Δy are obtained by the following equation.

$$\Delta x=b_{Xc}-a_{Xc} \qquad \text{Equation 7}$$

$$\Delta y=b_{Yc}-a_{Yc} \qquad \text{Equation 8}$$

If the incident angle θ of the irradiation electron **32** is adjusted to a level that can ignore the measurement error of an overlay misalignment amount, Δx and Δy can be used as the measurement result of the overlay misalignment amount. If correction of the misalignment amount is required due to the incident angle θ of the irradiation electron **32** (if a more accurate result is required), a value that is acquired and held during the correction processing of the incident angle θ of the irradiation electron **32** is used to correct the misalignment amount. If final incident angles in the X direction and the Y direction after correction of the incident angle are θ_x and θ_y, respectively, and if a difference in depth between the pattern **71** and the patter **72** is L, the corrected Δx and Δy are given by the following equations.

$$\Delta x=(b_{Xc}-a_{Xc})-L\cdot\tan\theta_x \qquad \text{Equation 9}$$

$$\Delta y=(b_{Yc}-a_{Yc})-L\cdot\tan\theta_y \qquad \text{Equation 10}$$

In the manufacturing process of a semiconductor, thicknesses of respective layers are monitored accurately. Thus, an accurate value for L can be obtained.

[Summary]

In the present embodiment, a scanning electron microscope is provided with the single electron gun **3**, the secondary electron detector **9** and the back scattered electron detector **10**. The present embodiment uses a method for calculating an overlay misalignment amount between different layers by acquiring simultaneously a detection signal corresponding to the pattern formed on the upper layer of the measurement point and a detection signal corresponding to the pattern formed on the lower layer of the measurement point. In this way, the present embodiment does not need to provide multiple electron guns, unlike the conventional device, and thus, no adjustment is required to align axes of electron beams with each other. Furthermore, since a detection signal corresponding to the pattern formed on the upper layer and a detection signal corresponding to the pattern formed on the lower layer are acquired simultaneously with the same irradiation electron **32**, a high accuracy in position detection is expected. Moreover, the single electron gun **3** allows miniaturization of the device configuration. Furthermore, since the pattern formed on the upper layer is measured with the secondary electron detector **9** and the pattern formed on the lower layer is measured with the back scattered electron detector **10**, the patterns formed on the respective layers can be detected highly accurately.

In the present embodiment, correction of the incident angle θ of the irradiation electron **32** to a value equal to or lower than a prescribed value with the standard sample **12** is followed by the measurement of an overlay misalignment amount. Thus, a unique misalignment amount caused by the incident angle θ of the irradiation electron **32** can be suppressed within an allowable value, and measurement accuracy of the overlay misalignment amount can be increased. Furthermore, since an overlay misalignment amount is corrected with the unique misalignment amount caused by the incident angle θ which is acquired in the correction, the measurement accuracy of the overlay misalignment amount can be further increased.

Feedback of the measurement result to a manufacturing process contributes to improvement in yield of a semiconductor device.

In the present embodiment, the incident angle θ of the irradiation electron **32** is corrected before the measurement of an overlay misalignment amount, and thus, accuracy of the measurement of an overlay misalignment amount, which follows the correction, is guaranteed. However, the incident angle θ of the irradiation electron **32** may be measured even after the measurement, and an alarm may be generated if θ varies before and after the measurement, or if the incident angle θ after the measurement exceeds a prescribed value.

Embodiment 2

Configuration of Device

Next, FIG. **9** illustrates a configuration of a device of a scanning electron microscope of Embodiment 2. In FIG. **9**, a part corresponding to that in FIG. **1** is denoted by the same reference numeral. A device body of the scanning electron microscope of the present embodiment includes a load chamber **21** disposed therein, in addition to the column **1** and the sample chamber **2**.

The load chamber **21** is adjacent to the sample chamber **2**. An openable and closable valve **24** is disposed between the load chamber **21** and the sample chamber **2**. In the load chamber **21**, a vacuum aligner **22** and a robot **23** are set. The load chamber **21** also has a non-illustrated vacuum exhaust mechanism.

The robot **23** is a conveyance mechanism that moves the wafer **11** between the XY stage **13** and the vacuum aligner **22**. The vacuum aligner **22** is a rotation mechanism that rotates and drives the wafer **11** in a horizontal plane. A mechanism, disclosed by Patent Literature 5 is used for the vacuum aligner **22**. The vacuum aligner **22** has, for example, a stage on which the wafer **11** is placed, a mechanism which detects the center position and direction of the wafer **11**, a mechanism that rotates and drives the stage, and a mechanism that detects a rotation amount. A rotation angle may be any angle, e.g., 180°, 120°, or 90°. In the following description, a case of rotating the wafer **11** by 180° will be described. Providing the load chamber **21** as in the present embodiment allows the wafer **11** to be kept in a vacuum state as in the sample chamber **2** (that is, without taking out the wafer **11** temporarily to an outside), and allows the wafer **11** to return onto the stage **13** after direction change.

[Method for Measuring Overlay Misalignment Amount]

The method for measuring an overlay alignment in the present embodiment will be described with reference to FIG. **10**.

The control PC **20** receives selection of the wafer **11** and a recipe and selection to execute overlay measurement, through the GUI screen (process **101**). The control PC **20** loads the selected wafer **11** to the sample chamber **2** (process **102**).

Next, the control PC **20** executes alignment by an optical microscope image and an SEM image (process **103**). Subsequently, the control PC **20** controls the XY stage **13** and moves the wafer **11** to an overlay measurement point that is registered in the recipe (process **104**).

Subsequently, the image processing board **19** acquires an SEM image in accordance with a predetermined condition that is registered in the recipe (process **105**). The SEM image acquired here is also obtained by adding a signal from the secondary electron detector **9** and a signal from the back scattered electron detector **10**. The image processing board **19** calculates an overlay misalignment amount with respect to the acquired SEM image (process **106**). In the present embodiment, the calculated overlay misalignment amount includes an apparent overlay misalignment amount between the pattern on the upper layer and the pattern on the lower layer (misalignment amount unique to the incident angle θ of the irradiation electron **32**). The correction processing of the incident angle θ described in Embodiment 1 is basically unnecessary. However, the correction processing may be executed.

The control PC **20** determines whether calculations of the overlay misalignment amount for all measurement points specified by the recipe are completed (process **107**). While an unmeasured measurement point remains (while a negative result is obtained), the control PC **20** moves a next measurement point to the irradiation range of the irradiation electron **32** and executes image acquisition and overlay misalignment amount calculation.

When the measurement of all the measurement points is completed (when a positive result is obtained), the control PC **20** moves the wafer **11** to the load chamber **21**, and rotates the direction of the wafer **11** by 180° (process **108**). Subsequently, the control PC **20** returns the rotated wafer **11** onto the XV stage **13**.

Subsequently, the control PC **20** executes alignment by the optical microscope image and the SEM image (process **109**). Then, the control PC **20** controls the XY stage **13** and moves the wafer **11** to an overlay measurement point that is registered in the recipe (process **110**).

Subsequently, the image processing board **19** acquires an SEM image in accordance with a predetermined condition that is registered in the recipe (process **111**). The SEM image acquired here is also obtained by adding a signal from the secondary electron detector **9** and a signal from the back scattered electron detector **10**. The image processing board **19** calculates an overlay misalignment amount with respect to the acquired SEM image (process **112**). The overlay misalignment amount here also includes an apparent overlay misalignment amount between the pattern on the upper layer and the pattern on the lower layer (misalignment amount unique to the incident angle θ of the irradiation electron **32**).

Subsequently, the control PC **20** determines whether calculations of the overlay misalignment amount for all measurement points specified by the recipe are completed (process **113**). When the measurement of all the measurement points is completed (when a positive result is obtained), the control PC **20** unloads the wafer **11** (process **114**).

Subsequently, the image processing board **19** or the control PC **20** corrects the measurement result by two overlay misalignment amounts that are measured on a single measurement point with changing the direction (process **115**). More specifically, an average value of the two overlay misalignment amounts is calculated. The process **115** may be executed before or at a same time of unload of the wafer **11**. Then, the control PC **20** outputs the measurement result of the overlay misalignment amount (process **116**).

FIG. **11** provides an explanation that rotation of the direction of the wafer **11** by 180° and two measurements of an overlay misalignment amount from different rotation directions for a single measurement point allow a misalignment amount unique to the incident angle θ of the irradiation electron **32** to be cancelled.

FIG. **11**(*a*) illustrates a state before rotating the wafer **11**. FIG. **11**(*b*) illustrates a state after rotating the wafer **11** by 180°. In FIG. **11**, a pattern **123** is formed on the upper layer of the wafer **11**, while a pattern **124** is formed on the lower layer. The height of the upper layer differs from that of the lower layer by a thickness L. The pattern **123** is deviated from the pattern **124** by a distance D in the X direction. The case where the irradiation electron **32** is incident on the wafer **11** at the incident angle θ is considered.

In the case of FIG. **11**(*a*), an overlay misalignment amount Δ_1 is obtained by the following equation.

$$\Delta_1 = D + L\cdot\tan\theta \qquad \text{Equation 11.}$$

Specifically, Δ_1 is a value that adds the misalignment amount of L·tan θ to D which is to be measured originally.

In contrast, in the case of FIG. **11**(*b*) where the wafer **11** is rotated by 180°, an overlay misalignment amount Δ_2 is obtained by the following equation.

$$\Delta_2 = D - L\cdot\tan\theta \qquad \text{Equation 12}$$

Specifically, Δ_2 is a value that adds the misalignment amount of −L·tan θ to D which is to be measured originally.

Then, the average value of Δ_1 and Δ_2 is obtained by the following equation.

$$(\Delta_1+\Delta_2)/2 = \{(D+L\cdot\tan\theta)+(D-L\cdot\tan\theta)\}/2 = D \qquad \text{Equation 13}$$

The average value by Equation 13 cancels the unique misalignment amount caused by the incident angle θ of the irradiation electron **32** so that a true overlay misalignment amount D can be calculated accurately.

If the same processing procedure is applied to measurement of an overlay misalignment amount D in the Y direction, a true overlay misalignment amount D can be calculated.

[Summary]

The present embodiment requires rotation of the direction of the wafer **11** by 180° and measurement of two overlay misalignment amounts for a single measurement point. However, preparation or correction of the standard sample **12** for correction of the incident angle θ of the irradiation electron **32** can be eliminated. As described above, the rotation angle of the wafer **11** may be any angle. For example, the wafer **11** may be rotated by 120° three times to measure an overlay misalignment amount with respect to a single measurement point from three directions and then an average value of the overlay misalignment amounts may be calculated. Furthermore, for example, the wafer **11** may be rotated by 90° four times to measure an overlay misalignment amount with respect to a single measurement point from four directions and then an average value of the overlay misalignment amounts may be calculated. If the wafer **11** is rotated and multiple overlay misalignment amounts for a single measurement point are calculated and averaged in this manner, influence of the incident angle θ of the irradiation electron **32** can be reduced. Thus, a highly accurate overlay misalignment amount can be calculated.

In the present embodiment, since the load chamber **21** is adjacent to the sample chamber **2**, the wafer **11** can be rotated in a vacuum state. As a result, the work time can be significantly reduced, compared to a case where the wafer **11** is taken out from the sample chamber **2** and rotated.

In the present embodiment, the load chamber **21** is provided. However, if the XY stage **13** includes a mechanism to rotate the wafer **11**, the load chamber **21** is not needed. In such a case, further miniaturizing of the device configuration is possible.

Other Embodiments

The present invention is not limited to the aforementioned embodiments. The present invention includes various modifications. For example, the electron gun **3** is used in the aforementioned embodiments, however, a charged particle source, e.g., an ion source or the like may be used. That is, the present invention is not limited to a scanning electron microscope, and may use a charged particle beam device, e.g., an ion microscope or the like. The scanning electron microscope of the embodiments is not limited to a length measuring SEM, and may be a review SEM.

The aforementioned embodiments provide detailed descriptions to make the present invention easy to understand. The present invention does not need to include all the described configurations. Part of one of the embodiments can be replaced with a configuration of the other embodiment. A configuration of one of the embodiments can be added to a configuration of the other embodiment. Another configuration can be added to part of configurations of the respective embodiments. Such part of configurations of the respective embodiments can be eliminated or replaced with another configuration.

Part or all of the aforementioned configurations, functions, processing units, processing means and the like may be achieved by, e.g., an integrated circuit or other hardware. The aforementioned configurations, functions and the like may be achieved by a processor interpreting and executing respective programs to achieve the functions. That is, the aforementioned configurations, functions and the like may be achieved by software. Information such as a program, a table or a file to achieve the functions may be stored in a storage device such as a memory, a hard disk or an SSD (solid state drive), or a storage medium such as an IC card, an SD card, or a DVD.

A control line or an information line is a line which is considered to be required for the descriptions. Not all control lines or information lines necessary for a product are illustrated. It may be considered that most of all the configurations are actually connected with each other.

REFERENCE SIGNS LIST

1 . . . Column, **2** . . . Sample chamber, **3** . . . Electron gun, **4** . . . Condenser lens, **5** . . . Aligner, **6** . . . ExB filter, **7** . . . Deflector, **8** . . . Objective lens, **9** . . . Secondary electron detector, **10** . . . Back scattered electron detector, **11** . . . Wafer, **12** . . . Standard sample, **13** . . . XY stage, **14** . . . Optical microscope, **15**, **16** . . . Amplifier, **17** . . . Electron beam scan controller, **18** . . . Stage controller, **19** . . . Image processing board, **20** . . . Control PC, **21** . . . Load chamber, **22** . . . Vacuum aligner, **23** . . . Robot, **24** . . . Valve, **33**, **34**, **71**, **72**, **123**, **124** . . . Pattern, **51** . . . Groove, **52** . . . Line pattern.

The invention claimed is:

1. A charged particle beam device comprising:

a charged particle beam source that irradiates a sample with a charged particle beam under one irradiation condition;

a first detector that detects a signal generated from a first pattern formed on a first layer in a measurement region;

a second detector that detects a signal generated from a second pattern formed on a second layer in the measurement region at a same time as the first detector; and

an image processing unit that measures an overlay misalignment amount between the first pattern and the second pattern based on a first detection signal and a second detection signal output by the first detector and the second detector, respectively.

2. The charged particle beam device according to claim **1**, further comprising an incident angle adjustment unit that allows a standard sample to be irradiated with the charged particle beam before measurement of the overlay misalignment amount and corrects an incident angle of a charged particle beam, the standard sample having patterns at a same position on an upper layer and a lower layer or having a known positional relationship between the patterns of the upper layer and the lower layer.

3. The charged particle beam device according to claim **2**, wherein the image processing unit corrects the overlay misalignment amount measured primarily, based on an incident angle measured in correction of the incident angle of the charged particle beam.

4. The charged particle beam device according to claim **3**, wherein the irradiation condition is set to allow the first and second detectors to detect respective signals from the corresponding layers independently and simultaneously.

5. The charged particle beam device according to claim **4**, wherein an overlay misalignment amount between the first pattern and the second pattern is calculated from

a position of the first pattern in the first layer, the position of the first pattern obtained by an image of the signal output from the first detector, and

a position of the second pattern in the second layer, the position of the second pattern obtained by an image of the signal output from the second detector.

6. The charged particle beam device according to claim **4**, wherein one of the first and second detectors is a secondary electron detector and the other is a back scattered electron detector.

7. The charged particle beam device according to claim **6**, wherein a recipe used in measurement of the overlay misalignment amount is capable of being selectively input through a GUI.

8. The charged particle beam device according to claim **1**, further comprising a mechanical unit being capable of rotating a direction of a sample in an incident plane of the charged particle beam, the sample being a target fir measurement of the overlay misalignment amount, and wherein

the image processing unit measures an overlay misalignment amount between the first and second patterns for a single measurement point from multiple rotation directions, and an average value of multiple measurement results is made to be an overlay misalignment amount between the first and second patterns.

9. The charged particle beam device according to claim **8**, wherein the image processing unit measures an overlay misalignment amount between the first and second patterns with respect to two rotation directions rotation angles of which are different from each other by 180°, and makes an average value of the two measurement results to be an overlay misalignment amount between the first and second patterns.

10. The charged particle beam device according to claim **9**, wherein the sample is rotated on a stage capable of rotating by 180°.

11. The charged particle beam device according to claim **8**, wherein the rotatable mechanical unit is disposed in a chamber connected to a sample chamber via a valve in an openable or closable manner, a sample to be irradiated with the charged particle beam being disposed in the sample chamber.

12. The charged particle beam device according to claim **8**, wherein the rotatable mechanical unit rotates and drives a stage, a sample to be irradiated with the charged particle beam being disposed on the stage.

13. An overlay misalignment measurement method comprising:

irradiating a sample with a charged particle beam from a charged particle beam source under one irradiation condition;

detecting a signal generated from a first pattern formed on a first layer in a measurement region by a first detector;

detecting a signal generated from a second pattern formed on a second layer in the measurement region by a second detector, at a same time as the first detector; and

measuring an overlay misalignment amount between the first and second patterns based on a first detection signal and a second detection signal output from the first detector and the second detector, respectively.

14. The overlay misalignment measurement method according to claim **13**, further comprising, before the measuring the overlay misalignment amount, irradiating a standard sample with the charged particle beam and correcting an incident angle of a charged particle beam, the standard sample having patterns at a same position on an upper layer and a lower layer or having a known positional relationship between the patterns on the upper layer and the lower layer.

15. The overlay misalignment measurement method according to claim **14**, wherein the overlay misalignment amount measured primarily is corrected based on the incident angle measured in the correction of the incident angle of the charged particle beam.

16. The overlay misalignment measurement method according to claim **13**, wherein an overlay misalignment measurement amount between the first and second patterns is measured for a single measurement point from multiple rotation directions, and an average value of multiple measurement results is made to be an overlay misalignment amount between the first and second patterns.

* * * * *